PROJECT REFERENCE NO.	SHEET NO.
B-5747	UO-3
CHATHAM 5747	
ROADWAY DESIGN ENGINEER	HYDRAULICS ENGINEER

INCOMPLETE PLANS
DO NOT USE FOR R/W ACQUISITION

DOCUMENT NOT CONSIDERED FINAL UNLESS ALL SIGNATURES COMPLETED

UTILITIES BY OTHERS

SEPI ENGINEERING & CONSTRUCTION
1025 Wade Avenue
Raleigh, NC 27605
Tel:919-789-9977
Fax:919-789-9591
License: C-2197

NOTE:
ALL PROPOSED UTILITY WORK SHOWN ON THIS SHEET WILL BE DONE BY OTHERS

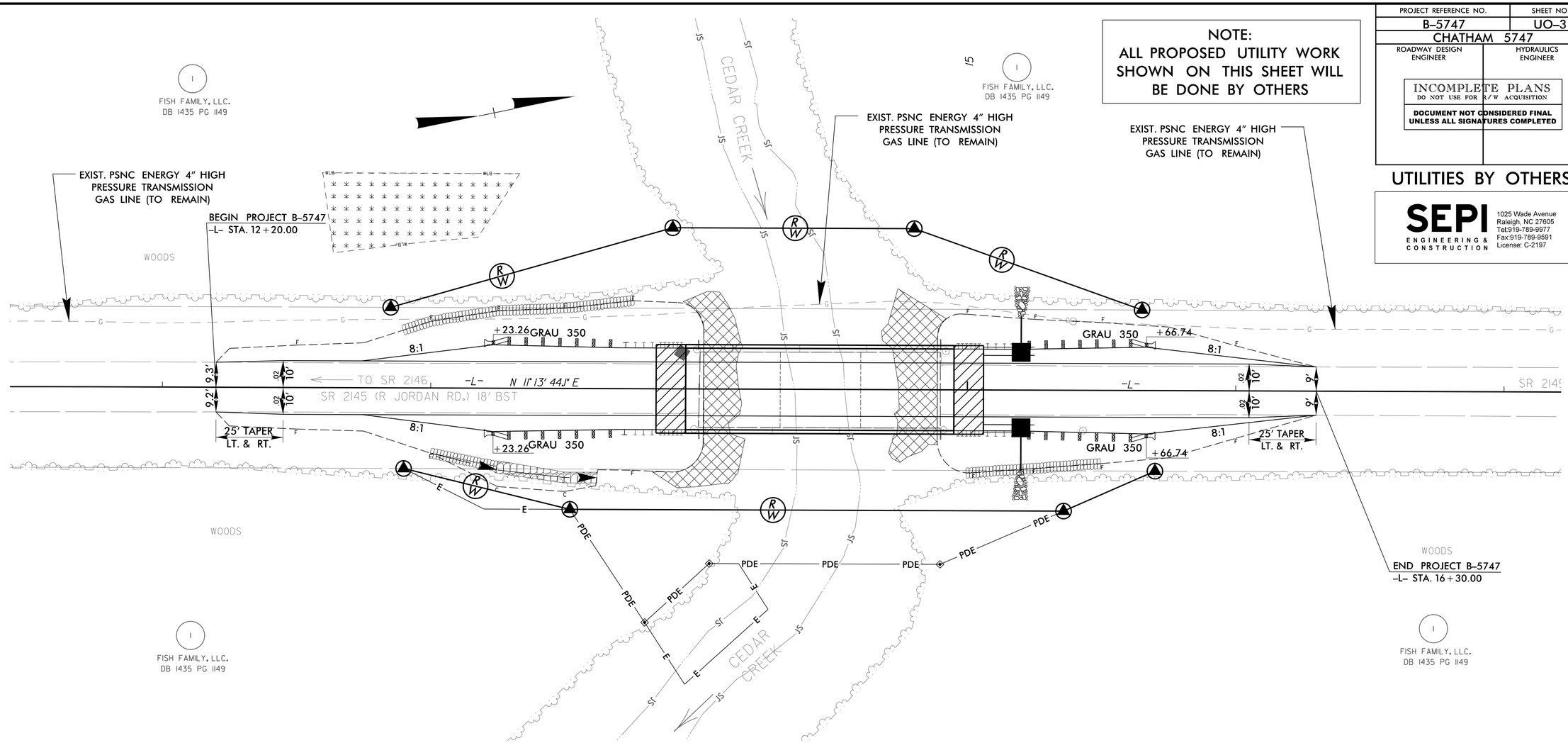

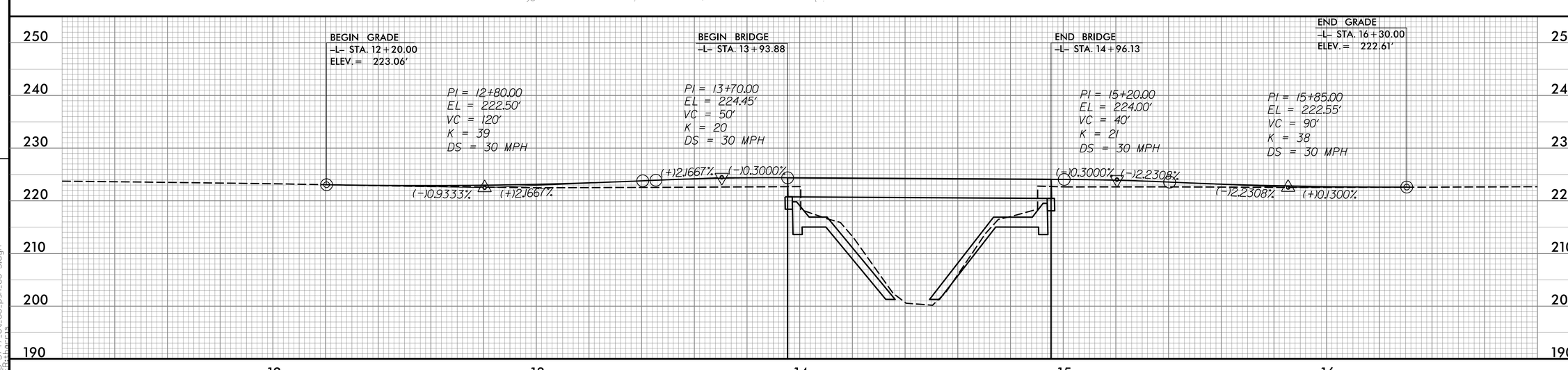

REVISIONS

8/17/99

10/26/2016
R:\5747_Ut_UO_psh_UO-3.dgn
jlsellers